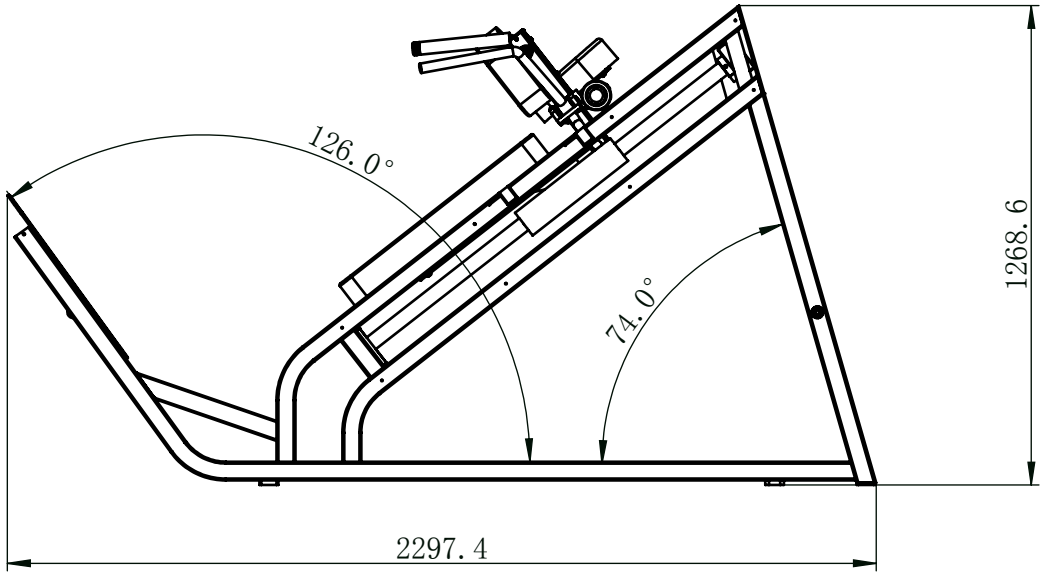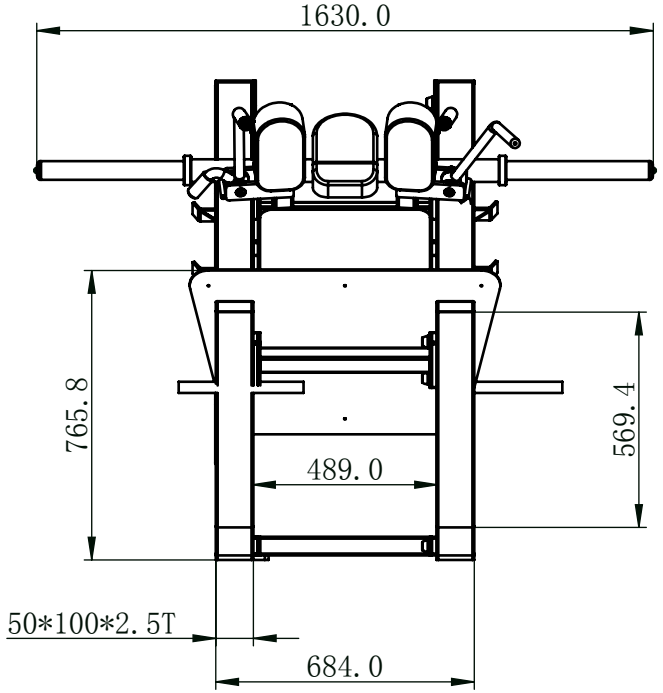LD9057